Tumble Dryer • USER MANUAL EN

22 PAP CE

14/10/2021

eta

EN PRIMARY CONSIDERATIONS 4
1. SAFETY INSTRUCTIONS 8
2. OVERVIEW 17
3. PREPARING THE LAUNDRY 18
4. USING THE TUMBLE DRYER 20
5. CLEANING AND CARE 28
6. TECHNICAL SPECIFICATIONS 31
7. TROUBLESHOOTING 32
8. AUTOMATIC FAULT WARNINGS AND WHAT TO DO 34
9. ENVIRONMENTAL PROTECTION AND PACKAGING INFORMATION 35
10. DESCRIBING THE ENERGY LABEL AND SAVING ENERGY 35

Tumble Dryer

eta 355690000

Thank you for choosing this product.
This User Manual contains important safety information and instructions on the operation and maintenance of your appliance.
Please take the time to read this User Manual before using your appliance and keep this book for future reference.

Icon	Caption	Description
	WARNING	Risk of serious injury or death
	RISK OF ELECTRIC SHOCK	Dangerous voltage
	FIRE	Risk of fire
	ATTENTION	Risk of injury or material damage
	IMPORTANT/NOTE	Information on correct operation of the system
	Read the instructions.	
	Hot surface	

PRIMARY CONSIDERATIONS

- This appliance can be used by children aged from 8 years and above and persons with reduced physical, sensory or mental capabilities or lack of experience and knowledge if they have been given supervision or instruction concerning use of the appliance in a safe way and understand the hazards involved. Children must not play with the appliance. Cleaning and user maintenance must not be made by children without supervision.
- This tumble dryer is intended only for household and indoor use. The warranty will be void in case of commercial use.
- Use this product only for laundry with a label that indicates it is suitable for drying.
- The manufacturer will not accept responsibility for damages resulting from incorrect use or transport.
- The service life time of your tumble dryer is 10 years. This is the period during which the spare parts required for the tumble dryer to operate properly will be commercially available.
- Do not allow floor coverings to obstruct the ventilation openings.
- Installation and repair of the machine should only be made by an authorised repair agent. The manufacturer cannot be held responsible for damages resulting from un-authorised repairs.

⚠ **WARNING:** Never spray or pour water onto the dryer to wash it! There is risk of electric shock!

- Leave at least 3 cm of space between the side and rear walls of the product and above if you plan on placing your appliance under a worktop.
- Assembly / disassembly for under-counter installation if neccessary must be done by an authorised service agent.
- Before installation, check the product for visible damage. Never install or operate a damaged product.
- Keep pets away from the dryer.
- Fabric softeners or similar products should be used in accordance with the manufacturers instructions.
- Remove all objects from pockets such as lighters and matches.
- The appliance must not be installed behind a lockable door, a sliding door or a door with a hinge on the opposite side to that of the tumble dryer, if it prevents the door from being fully opened.

⚠ **WARNING:** In the appliance enclosure or in the built-in structure, keep ventilation openings clear of obstruction.

- Before contacting the local Authorised Service Provider for the installation of the dryer, check the information in the user manual to make sure that the electrical installation and water outlet is suitable. If they are not, call a qualified electrician and a plumber to have the necessary adjustments made.

- It is the customer's responsibility to prepare the dryer's installation place, as well as the electricity and waste water installation. Before installation, check the dryer for damage. If damaged, do not have it installed. Damaged products may endanger your health.
- Install the dryer on a stable and flat surface.
- Run the dryer in a dust-free environment where the air ventilation is good.
- The clearance between the dryer and the floor **should not be** reduced with objects such as carpets, wood or tape.
- **Do not block the ventilation grills** found on the plinth of the tumble dryer.
- The appliance must not be installed behind a lockable door, a sliding door or a door with a hinge on the opposite side of the tumble dryer, in such a way that blocks the full opening of the tumble dryer door.
- Once the dryer has been installed, the connections must remain stable. When installing the dryer, make sure that the rear surface is not leaning on anything (e.g. tap, socket).
- The operating temperature of the dryer is +5°C to +35°C. If operated out of this temperature range, the performance of the dryer will be affected negatively and the product will be damaged.
- Be careful when carrying the product since it is heavy. Always wear safety gloves.
- Always install the product should be placed against a wall.

- The rear surface of the product should be placed against the wall.
- When the product is placed on a stable surface, use a water level to check if it is fully stable. If not, adjust the feet until it becomes steady. Repeat this process every time you relocate the product.
- Do not place the dryer onto the power cable.

Disposing the Old Product

This product complies with EU WEEE Directive (2012/19/EU). This product bears a classification symbol for waste electrical and electronic equipment (WEEE). This symbol, which is found on the product or information label, indicates that this product must not be disposed together with other household waste at the end of its service life. To prevent the potential harms of uncontrolled waste disposal on the environment and human health, please keep this product separate from other types of waste, and to prevent sustainable reuse of material resources, make sure that it is recycled responsibly. Contact your dealer or local authorities to get information on how and where you can take the product for environmentally-safe recycling. This product cannot be mixed with other commercial wastes for recycling.

1. SAFETY INSTRUCTIONS

This section contains safety instructions that will help protect you from risk of personal injury or property damage. Failure to follow these instructions will void any warranty.

1.1 Electrical Safety

- The appliance must not be supplied through an external switching device, such as a timer, or connected to a circuit that is regularly switched on and off by a utility.
- Do not touch the power plug with wet hands. Always pull the plug to unplug the product, otherwise, there will be risk of an electric shock.
- Connect the dryer to a grounded socket with fuse protection. The earth connection must be installed by a qualified electrician. Our company cannot be held responsible for damages/losses resulting from using the dryer without an earth connection as required by local regulations.
- The voltage and the allowable fuse protection are indicated on the type plate. **(For the type plate, please see Overview)**
- Voltage and frequency values indicated on the type plate must be equal to the mains voltage and frequency value in your house.
- Unplug the dryer when it is not used for an extended period, and before installation, maintenance, cleaning and repair, otherwise, the dryer may get damaged.
- The plug socket must be freely accessible at all times after installation.

⚠ A damaged power cord / plug may cause a fire or electric shock. If the cord or plug is damaged, you must replace it. Replacement must only be performed by qualified persons.

⚠ To avoid the risk or fire or electric shock, do not use extension cords, multi sockets or adapters to connect the dryer to mains power.

1.2 Children's Safety

- This appliance is not intended for use by people (including children) with reduced physical, sensory or mental capabilities, or lack of experience and knowledge, unless they have been given supervision or instruction concerning use of the appliance by a person responsible for their safety.
- Children of less than 3 years should be kept away unless continuously supervised.
- This appliance can be used by children aged from 8 years and above, and persons with reduced physical, sensory or mental capabilities or lack of experience and knowledge if they have been given supervision or instruction concerning use of the appliance in a safe way and understand the hazards involved. Children must not play with the appliance. Cleaning and user maintenance must not be made by children without supervision.
- Do not leave children unattended near the machine.

- Children might lock themselves in the machine resulting in risk of death.
- Do not allow children to touch the glass door during operation. The surface becomes extremely hot and may cause skin damage.
- Keep packaging material away from children.
- Poisoning and irritation may occur if detergent and cleaning materials are consumed or come into contact with the skin and eyes.
- Keep cleaning materials out of the reach of children Electrical products are dangerous for children.
- Keep children away from the product while it is running.
- To prevent children from interrupting the dryer cycle, you can use the child lock to avoid any changes in the running programme.
- Do not allow children to sit/climb on or climb inside the product.

1.3 Product Safety

Due to risk of fire, the following laundry items and products should NEVER be dried in the dryer:

- Do not dry unwashed items in the tumble dryer.
- Items that have been soiled with substances such as cooking oil, acetone, alcohol, petrol, kerosene, spot removers, turpentine, waxes and wax removers should be washed in hot water with an extra amount of detergent before being dried in the tumble dryer.

- Cleaning cloths and mats that have residues of flammable cleaning agents or acetone, gas, patrol, stain remover, turpentine, candle, wax, wax remover or chemicals.
- Laundry that has residues of hair sprays, nail polish remover and similar substances.
- Laundry on which industrial chemicals have been used for cleaning (such as chemical cleaning).
- Laundry that has any kind of foam, sponge, rubber or rubber-like parts or accessories. These include latex foam sponge, shower caps, waterproof fabrics, fitted clothes, and foam pillows.
- Items with filling and damaged (parts or jackets). Foam protruding from these items might catch fire during the drying process.
- Operating the dryer in environments that contain flour or coal dust may cause explosion.

⚠ **ATTENTION**: Underwear that contains metal reinforcements should not be put in the dryer. The dryer may be damaged if metal reinforcements come loose and break off during drying.

FIRE:R290

Risk of fire and damage!

This product contains enviromental friendly but flammable R290 gas. Keep open flame and fire sources away from the product.

1.4 Correct Use

⚠ **ATTENTION**: Never stop a tumble dryer before the end of the drying cycle unless all items are quickly removed and spread out so that the heat is dissipated.

⚠ **ATTENTION: Make sure that pets do not enter the dryer. Check the inside of the dryer before using it.**

⚠ **ATTENTION**: Superheating of clothes inside the dryer can occur if you cancel the programme or in the event of a power failure whilst the dryer is running. This concentration of heat can cause self-combustion so always activate the Refresh programme to cool down or quickly remove all laundry from the dryer in order to hang them up and dissipate the heat.

- Use the dryer only for household drying and to dry fabrics with a label that indicates they are suitable for drying. All other uses are out of the scope of intended use and are prohibited.
- The warranty will be void in case of any commercial use.
- This appliance is designed to be used inside domestic residences only, and should be placed on a straight and stable surface.
- Do not lean against or sit on the door of the dryer. The dryer may tip over.
- To maintain a temperature that will not harm the laundry (e.g. to prevent the laundry from catching fire), a cooling process starts after the heating process. After this, the programme ends. At the end of the programme, always remove the laundry promptly.

⚠ **ATTENTION**: Never use the dryer without a lint filter or with a damaged lint filter.

- Lint filters must be cleaned **after each use** as indicated in **Cleaning the Lint Filter**.
- Lint filters must be dried after wet cleaning. Wet filters might cause malfunction during the drying process.
- Lint accumulation must not to be allowed around the tumble dryer (not applicable for appliances intended to be vented to the exterior of the building).

IMPORTANT: The clearance between the dryer and the floor should not be reduced with objects such as carpets, wood or panel, otherwise, sufficient air intake cannot be ensured for the machine.

- Do not install the dryer in rooms where there is risk of freezing. Freezing temperatures negatively affect the dryers performance.Condensed water that freezes in the pump and hose may cause damage.

1.5 Installing On Top Of a Washing Machine

ATTENTION: A washing machine cannot be placed on the dryer. Pay attention to the warnings below when installing the dryer on a washing machine.

ATTENTION: The dryer can only be placed on washing machines that have a same capacity and above.

- To use the dryer on the washing machine, a fixing part must be used between the two products. The fixing part must be attached by an Authorised Service Provider.
- When the dryer is placed on the washing machine, the total weight of these products may reach almost 150 kilograms (when loaded). Place the products on a solid floor that has a load bearing capacity!

Appropriate Installation Table for Washing Machine and Tumble Dryer					
Tumble Dryer (Depth)	Washing Machine				
	37-41 cm	42-45 cm	46-49 cm	50-56 cm	57-63 cm
52,5 cm	x	✓	✓	✓	✓
56 cm	x	x	✓	✓	✓
61 cm	x	x	x	✓	✓
64 cm	x	x	x	x	✓

(For the depth information, please see 7. Technical Specifications)

In order to put the dryer machine onto the washing machine, a special stacking kit is required as an optional extra. Please contact customer service to acquire. The assembly instruction will be served together with the stacking kit.

CE Declaration of conformity

We declare that our products meet the applicable European Directives, Decisions and Regulations and the requirements listed in the standards referenced.

1.6 Connection to Water Outlet (with optional drain hose)

In products with a heat pump unit, water accumulates in the water tank during the drying process. You must empty the accumulated water after each drying process. Instead of periodically emptying the water tank, you can also use the water drain hose provided with the product to directly drain the water outside.

1.6.1 Connecting the Water Discharge Hose

1. Pull and take out the end of the hose at the back of the dryer. Do not use any tools to take out the hose.
2. Fit one end of the water discharge hose, which is provided with the product, to the slot from which you have removed the hose.
3. Fix the other end of the water discharge hose directly to the water outlet or sink.

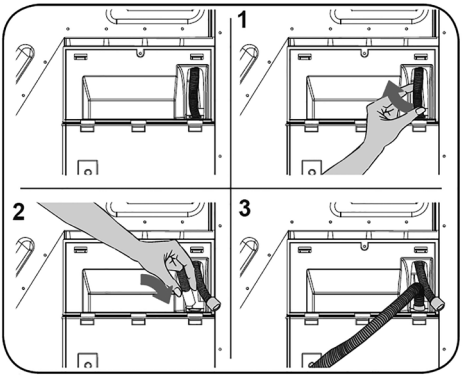

ATTENTION: The hose must be connected in a manner that it cannot be displaced. If the hose comes out during water discharge, there might be flooding in your house.

IMPORTANT: The water discharge house must be installed at a height of 80 cm maximum.

IMPORTANT: The water discharge hose must not be bent between the outlet and the product, folded or stepped over.

1.7 Adjusting the Feet

- For the dryer to work with less noise and vibration, it must be stable and balanced on its feet. Adjust the feed to ensure that the product is balanced.
- Rotate the feet to the right and to the left until the dryer is even and stable.

IMPORTANT: Never remove the adjustable feet.

1.8 Electrical Connection

ATTENTION: There is risk of fire and electric shock.

- Your dryer is set to 220-240 V and 50 Hz.
- The mains cable of the dryer is equipped with a special plug. This plug must be connected to an earthed socket protected by a fuse of 16 Amperes as indicated on the type plate. The fuse current rating of the power line where the outlet is connected must also be 16 amperes. Consult a qualified electrician if you do not have such an outlet or fuse.
- Our company cannot be held responsible for damages resulting from usage without earthing.

IMPORTANT: Operating your machine at low voltage values will shorten the service life and decrease the performance of your machine.

1.9 Under Counter Installation

- Leave at least 3 cm of space between the side and rear walls of the product and the underside of the worktop when installing your product under a counter.
- Assembly / disassembly under the counter if neccessary must be done by authorized service.

2. OVERVIEW

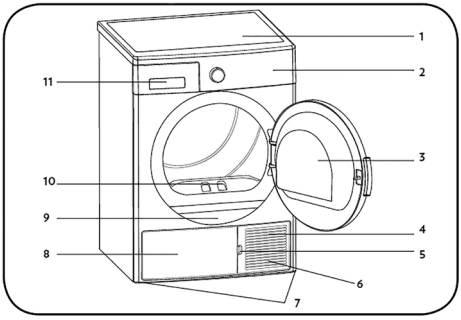

1. Top plate
2. Control panel
3. Door
4. Heat exchanger
5. Door lock for heat exchanger
6. Ventilation grilles
7. Adjustable feet
8. Lower part cover
9. Type plate
10. Filter for textile fibers
11. Waste water drawer cover

3. PREPARING THE LAUNDRY

3.1 Sorting the Laundry to be Dried

Follow the instructions on the labels of the laundry to be dried. Only dry items that have a statement/symbol that indicates „they can be dried in a dryer“.

- Do not operate the product with load amounts and laundry types other than those given in 4.3. Load Capacity.

Suitable for drying in a dryer	Does not need ironing	Sensitive/Delicate drying	Not suitable for drying in a dryer
No drying	Do not dry-clean	At any temperature	At high temperatures
At medium temperatures	At low temperatures	Heatless	Hang to dry
Spread to dry	Hang wet to dry	Spread in shadow to dry	Suitable for dry cleaning

Do not dry thin, multi-layer or thick-layer fabrics together as they dry at different levels. For this reason, dry clothes together that have the same structure and fabric type. This way, you can get an even drying result. If you think that the laundry is still wet, you can select a time programme for additional drying.

Please dry your big (like duvets) and small sizes of laundries seperately in order to not to have a damp laundries.

IMPORTANT: Delicate fabrics, embroided fabrics, woolen/silk fabrics, clothes made of delicate and expensive fabrics, airtight clothes and tulle curtains are not suitable for drying in the dryer.

3.2 Preparing the Laundry to be Dried

Risk of explosion and fire!

Remove all objects from pockets such as lighters and matches.

ATTENTION: The drum of the dryer and the fabrics may get damaged.

- The clothes may have become entangled during the washing process. Separate them from each other before placing them in the dryer.
- Remove all objects in the pockets of the clothes and apply the following:
- Tie fabric belts, apron laces etc. to each other or use a laundry bag.
- Lock the zips, clasps and fasteners, do up the buttons of covers.
- To get the best drying result, sort the laundry according to the textile type and drying programme.
- Remove clips and similar metal parts from the clothes.
- Woven goods such as t-shirts and knit clothes **generally shrink in the first drying**. Use a protective programme.
- **Do not over-dry synthetics. This will cause creases.**
- When washing the laundry to be dried, adjust the amount of softener according to the data from the manufacturer of the washing machine.

3.3 Load Capacity

Follow the instructions in the „Programme selection and consumption table“. **(See: 5.2 Programme selection and consumption table)**. Do not load the product with more laundry than the capacity values specified in the table.

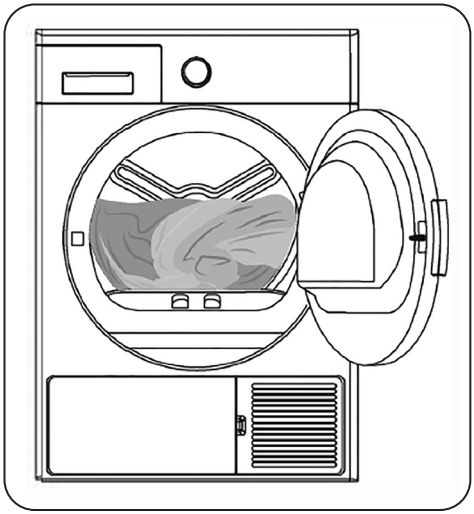

IMPORTANT: It is not recommended to load the dryer with more laundry than the amount shown in the figure. When overloaded, the drying performance of the dryer will decrease and the dryer and laundry might be damaged.

Laundry	Dry load weight (gr)
Bedsheet (double)	725
Pillowcase	240
Bath Towel	700
Hand Towel	225
Shirt	190
Cotton Shirt	200
Jean	650
Fabric - Gabardine Trousers	400
T-shirt	120

4. USING THE TUMBLE DRYER

4.1 Control Panel

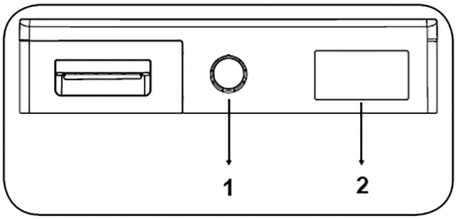

1. Programme Selection Knob
2. Electronic indicator and additional functions

4.1.1 Programme Selection Knob

Use the programme selection knob to select the desired drying programme.

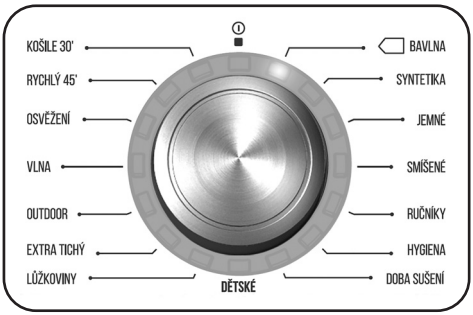

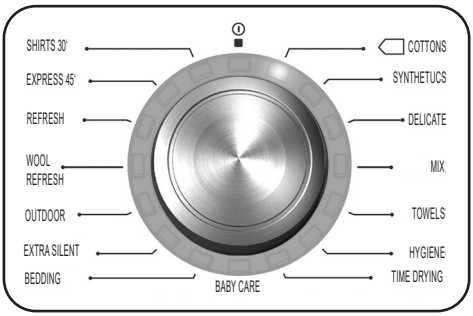

4.1.2 Electronic Indicator and Additional Functions

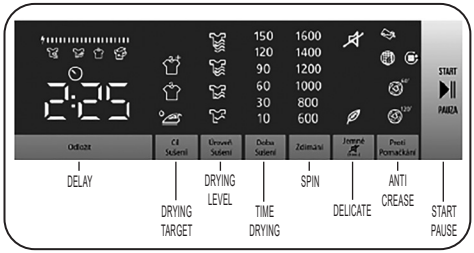

Display symbols:

Water tank warning indicator	
Lint filter cleaning warning indicator	
Heat exchanger cleaning warning indicator	
Extra Dry	
Cupboard Dry	
Iron Dry	
Drying level 1	
Drying level 2	
Drying level 3	
Drying level 4	
Delay Timer	

Anti-crease 60‘	60′
Anti-crease 120‘	120′
Delicate	
Buzzer Cancel	
Start and pause	
Drying Step Display:	
Drying	
Iron dry	
Cupboard dry	
End	

The electronic display shows the drying steps throughout the program. Every time a program step starts, the relevant drying step light turns on. Once the drying step is complete, the relevant drying step light turns off.

Energy Consumption Display

The energy consumption display shows the energy consumption of the selected program. The bigger the display, the more the energy consumption. The energy consumption level increases or decreases depending on the fabric type, duration of the selected program, the drying level and the spinning speed.

4.2 Programme Selection and Consumption Table

Press the Start/Pause button to start the programme. The remaining time of the program is seen on the display. The Drying LED, that indicates that the programme has started, will come on.

Programme	Load (kg)	Washing machine spin speed	Approximate amount of remaining humidity	Duration (minutes)
Cottons	8	1000	60%	179
Synthetics	4	800	40%	81
Delicate	2	600	50%	58
Mix	4	1000	60%	112
Towels	3	1000	60%	92
Hygiene	3	1000	60%	80
Time drying	-	-	-	-
Baby Care	3	1000	60%	87
Duvet	2,5	800	60%	109
Extra Silent	8	1000	60%	216
Outdoor	2	800	40%	63
Wool	1,5	600	50%	160
Refresh	-	-	-	10
Express 45‘	1	1200	50%	45
Shirts 30‘	0,5	1200	50%	30

Energy consumption values				
Programme	Load (kg)	Washing machine spin speed	Approximate amount of remaining humidity	Energy consumption values (kWh)
Cottons	8	1000	60%	1,39
Cottons + Iron Dry	8	1000	60%	1,09
Synthetics	4	800	40%	0,56
Power consumption in the „off mode“ P_O (W)				0,5
Power consumption in the „on mode“ P_L (W)				1

The Cotton Cupboard Dry programme is the standard drying programme that can be run with a full or half load and for which the information is given on the label and product receipt. This programme is the most energy efficient programme to dry normal wet cotton clothes.

*Energy labelling standard programme (EN 61121:2013)

All values in the table were determined in accordance with the EN 61121:2013 standard. Consumption values may vary from the values in the table depending on the fabric type, spin speed, environment conditions and voltage values.

Selection Stand By
After 15 minutes without user action in selection mode, machine goes to energy-saving mode due to decrease energy consumption. In this model, „- - - „ must blink with 0,5 sec ON, 3 sec OFF during energy-saving mode. At the energy saving mode, „- - - „ led luminosity is reduced. To restart the machine it will be necessary to move selector to OFF and select again the program

4.2.1 Auxiliary Functions

The table that summarises the options that can be selected in programmes is given below.

Option	Description
Drying Target	Select the drying target suitable for your laundry to be dried. Select Extra Dry for thick and multilayer laundry that takes time to dry. Select Closet Dry for regular, single-layer laundry. Select Iron Dry for laundry that you wish to leave damp, ready for ironing.
Drying Level	The dampness level obtained after drying can be increased by another 3 levels in addition to the standard setting. This way, it is ensured that the laundry is drier. Levels that can be selected apart from the standard setting (Level 1) 2 (low), 3 (medium), 4 (high). After selection, light of the relevant drying level turns on.
Delicate Drying*	Delicate fabrics are dried in a longer time at low temperatures.
Delayed Start	You can delay the start of the program by selecting a time between 1 and 23 hours. You can press Start/Pause to activate the desired delay time. When this time is up, the selected program will start automatically. During the delay time, options compatible with the program can be activated/ deactivated. If you long press the Delayed Start button, the delay time will change continuously.
Cancel Audible Warning	The drying machine will give an audio warning when the buttons are pressed, when the program selection knob is turned and when the program ends. To cancel audio warnings, press and hold the “Anti-Crease Option” for 3 seconds. When you press this button, you will hear an audible warning that indicates that the option has been activated and the audible warnings stated will be cancelled.
Time Drying	If the program knob is turned to Time Drying, you can press the Time Drying option button to select it and press Start/ Pause to start the program.

Option	Description
Child Lock	There is a child lock option to avoid changes in the programme flow when keys are pressed during the programme. To activate child lock feature user should press „Delicate”“ and „Anticrease“ buttons simultaneously for 3 sec. When the child lock activated, all keys will be deactivated. Child lock is not automatically deactivated at the end of the program. To deactivate child lock at end of the programme, set the programme selection knob to „Off“ position. Then programme selection knob to first position. Child lock is still active. To deactivate the child lock, user should press „Delicate“ and „Anticrease“ buttons simultaneously for 3 sec. When activating/deactivating the child lock, „CL“ will visualize on display for 2 sec and then becomes off; and an audible warning will be heard. Warning: When the product is running or the child lock is active, if you turn the programme selection knob, you will hear an audible warning and „CL“ will visualize on display for 2 sec and then becomes off. If you turn the programme selection knob, you will hear an audible warning. Even if you set the programme knob to another programme, the previous programme will continue running. To select a new programme, you need to deactivate the child lock and then set the programme selection knob.
Anti-crease*	If you do not open the door of the machine at the end of the program, the anti-crease option will be active for 60 minutes. When the anti-crease option is selected, anti-crease will be active for 120 minutes.
Spin Speed Selection	For the laundry to be dried, set the spin speed on the washing machine where you washed the laundry. This way, it is ensured that the estimated drying time is more accurately displayed.
*Options vary depending on model.	

4.2.2 Starting the Programme

Press the Start/Pause button to start the programme. The Drying LED that indicates that the programme has started will come on.

Programme	Description
Cottons	This programme dries cotton laundry including bedsheets, pillowcases, pyjamas, underwear, tablecloths etc.
Synthetics	This programme dries synthetics, such as shirts, t-shirts, blouses, at a lower temperature compared to the cottons programme.
Delicate	Thiis programme dries thin clothes like shirts, blouses and silk garments at a low temperature to make them ready to wear.
Mix	This programme dries cotton-synthetic mixed garments that do not discolour to make them ready to wear.
Towels	This programme dries thick cotton laundry such as towels, bathrobe, etc.
Hygiene	This programme is suitable for the fabrics which need hygiene requirements.
Time drying	To reach the required drying level at a low temperature, you can use the time programmes of 10 min. to 150 min. Regardless of the drying level, the programme stops at the desired time.
Baby Care	This programme provides hygienic drying for delicate infant clothes at a low temperature.
Duvet**	This programme is used to dry single duvet with feather, down or synthetic fillings.
Extra Silent	Silent program operates the tumble dryer by decreasing noise emitted to environment. Noise level significantly decreases compared to Cotton Cupboard Dry programme.
Outdoor	This programme is suitable for outdoor clothing, waterproof jackets, jackets with inner insulation, etc.
Wool	Use this program for gentle drying of woolen clothes, washed as stated in the washing instructions. Take out the clothes at the end of the drying cycle. Do not use this program to dry acrylic items.
Refresh	Time drying option is selected between 10 minutes and 150 minutes without providing hot air, refresh is done and bad odors can be eliminated.
Express 45‘	1 kg of synthetics spun at a high speed in the washing machine are dried in 45 minutes.
Shirts 30‘	2 to 3 shirts are ready for to be ironed in 30 minutes.

IMPORTANT: Do not open the loading door while the programme is running. If you have to open the door, do not keep it open for a long time.

4.2.3 Programme Progress

During the Programme
If you open the door when the programme is running, the product will switch to standby mode. Once the door has been closed, press the Start/Pause key to resume the programme.

Do not open the loading door when the programme is running. If you have to open the door, do not keep it open for a long time.

Programme End
Once the programme is over, the warning LEDs for water tank level, filter cleaning and condenser cleaning will turn on. Additionally, an audible warning will be given at the end of the programme. You can remove the laundry to make the machine ready for a new load.

IMPORTANT: Clean the lint filter after every programme. Empty the water tank after every programme.

IMPORTANT: If you do not take out the laundry after the programme has ended, the 1-hour Anti Crease phase will automatically be activated. This programme rotates the drum at regular intervals to prevent creases.

4.3 Drum Light Information

- This product includes LED Drum Light.
- The light works automatically when you open the door. And closes itself after a while automatically.
- It is not an adjustable option for user to open or close it.

Programme	Optionen								
	Drying Target	Delay Start	Buzzer Cancel	Child Lock	Delicate	Time Drying	Drying Level	Anticrease	Spin
Cottons	✓	✓	✓	✓	✓	x	✓	✓	✓
Synthetics	✓	✓	✓	✓	✓	x	✓	✓	✓
Delicate	✓	✓	✓	✓	✓	x	x	✓	✓
Mix	✓	✓	✓	✓	✓	x	✓	✓	✓
Towels	✓	✓	✓	✓	✓	x	✓	✓	✓
Hygiene	✓	✓	✓	✓	✓	x	✓	✓	✓
Time drying	x	✓	✓	✓	x	✓	x	✓	x
Baby Care	✓	✓	✓	✓	✓	x	✓	✓	✓
Duvet	✓	✓	✓	✓	✓	x	✓	✓	✓
Extra Silent	✓	✓	✓	✓	x	x	x	✓	x
Outdoor	✓	✓	✓	✓	✓	x	✓	✓	✓
Wool	x	✓	✓	✓	x	x	x	✓	x
Refresh	x	✓	✓	✓	x	✓	x	✓	x
Express 45‘	✓	✓	✓	✓	x	x	x	✓	x
Shirts 30‘	✓	✓	✓	✓	x	x	x	✓	x
x	Unavailable								
✓	Available								

5. CLEANING AND CARE

IMPORTANT: Do not use industrial chemicals to clean your dryer.
Do not use a dryer that has been cleaned with industrial chemicals.

5.1 Cleaning the Lint Filters

IMPORTANT: DO NOT FORGET TO CLEAN THE LINT FILTERS AFTER EACH USE.

To clean the lint filters:

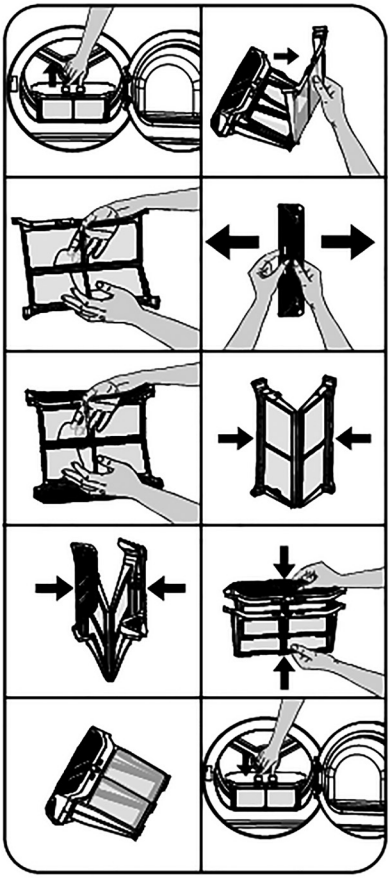

1. Open the loading door.
2. Pull up the lint filters to remove it.
3. Open the outer filter
4. Clean the outer filter by your hands or using a soft cloth.
5. Open the inner filter
6. Clean the inner filter by your hands or using a soft cloth
7. Close the filters and fit the hooks
8. Place inner filter inside of outer filter
9. Refit the Lint filter

After the dryer has been used for a certain period of time, if you encounter a layer that will cause obstruction on the filter surface, wash the filter with warm water to clean the layer. Dry the filter thoroughly before reinstalling it again.

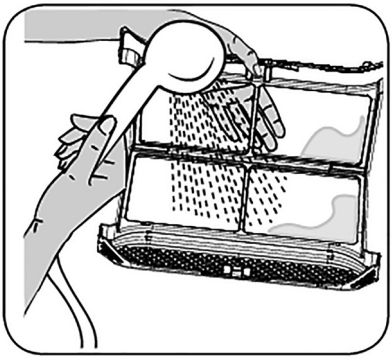

5.2 Emptying the Water Tank

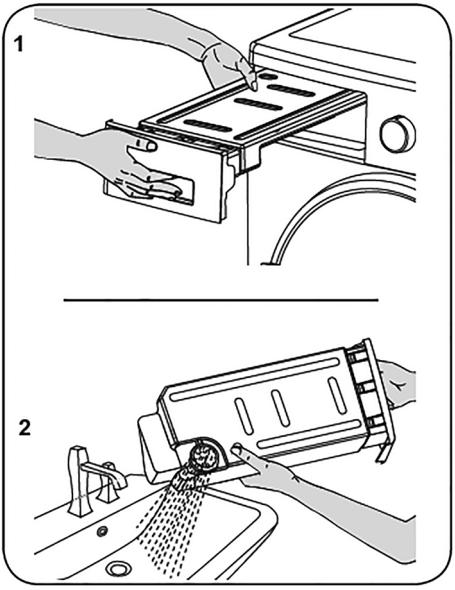

1. Pull the drawer cover and carefully take out the tank.
2. Empty the water in the tank.
3. If there is lint accumulated on the discharge cap in the tank, clean it with water.
4. Refit the water tank.

IMPORTANT: Never remove the water tank when the programme is running. The water condensed in the water tank is not suitable for human consumption.

IMPORTANT: DO NOT FORGET TO EMPTY THE WATER TANK AFTER EACH USE.

5.3 Cleaning the Heat Exchanger

IMPORTANT: Clean the heat exchanger when you see the warning “Heat Exchanger cleaning”.

IMPORTANT: EVEN IF THE “HEAT EXCHANGER CLEANING WARNING LED” IS NOT ON: CLEAN THE HEAT EXCHANGER AFTER EVERY 10 DRYING PROCESSES OR THREE TIMES A MONTH.

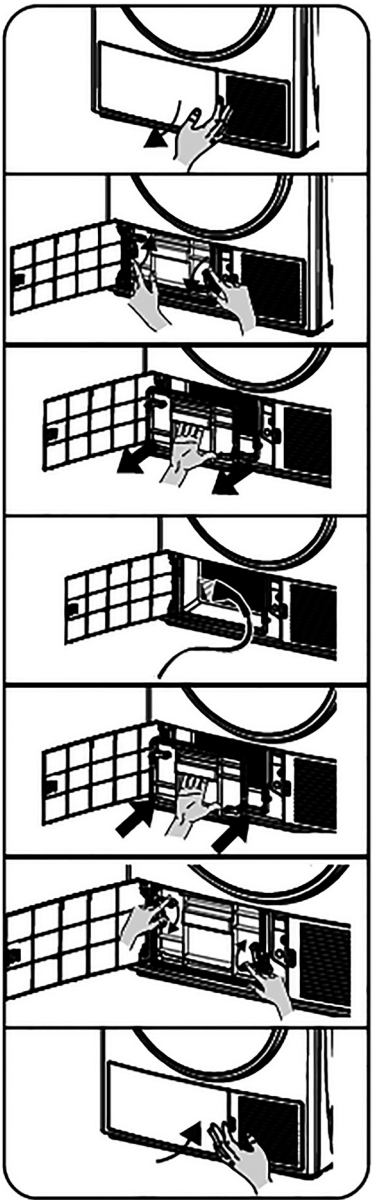

If the drying process is completed, open the loading door and wait for it to cool down.

1. Open the kick plate cover as shown.
2. Unlock the exchanger cover by turning in the direction shown with arrows.
3. Take out the exchanger cover as shown.
4. Clean the front surface of the exchanger as shown.
5. Fit the exchanger cover as shown.
6. Lock the exchanger cover by turning in the direction shown with arrows.
7. Close the kick plate cover as shown.

WARNING: DO NOT CLEAN WITH BARE HANDS SINCE THE EXCHANGER FINS ARE SHARP. THEY MAY HURT YOUR HANDS

5.4 Cleaning the Humidity Sensor

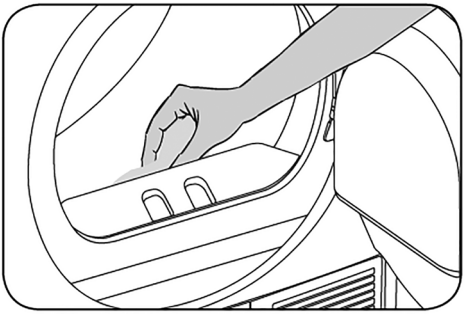

Inside the machine, there are humidity sensors that detect whether the laundry is dry or not.

To clean the sensors:
1. Open the loading door of the machine.
2. If the machine is still hot due to the drying process, wait for it to cool down.
3. Using a soft cloth soaked in vinegar, wipe the metal surfaces of the sensor and dry them.

IMPORTANT: CLEAN THE METAL SURFACES OF THE SENSOR 4 TIMES A YEAR.

IMPORTANT: Do not use metal tools to clean the metal surfaces of the sensor.

WARNING: Due to the risk or fire and explosion, do not use solution agents, cleaning agents or similar products when cleaning the sensors.

5.5 Cleaning the Inner Surface of the Loading Door

IMPORTANT: DO NOT FORGET TO CLEAN THE INNER SURFACE OF THE LOADING DOOR AFTER EACH DRYING PROCESS.

Open the loading door of the dryer and clean all of the inner surfaces and the gasket with a soft, damp cloth.

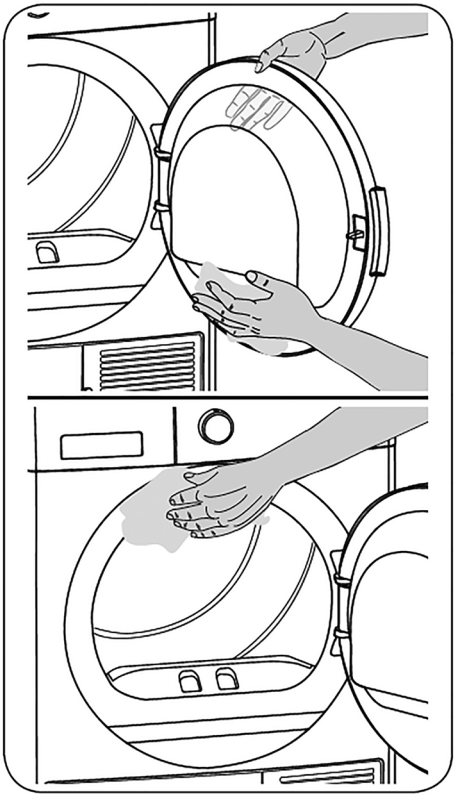

6. TECHNICAL SPECIFICATIONS

Brand	ETA
Model name	ETA355690000
Height	Min: 845 mm / Max: 855 mm*
Width	596 mm
Depth	609 mm
Capacity (max.)	8 kg**
Net weight (with plastic door)	49 kg
Net weight (with glass door)	51,4 kg
Voltage	220-240 V
Power	1000 W

* Min. height: Height with the adjustable feet at the lowest level. Max. height: Height with the adjustable feet extended to the maximum.

** Dry laundry weight before washing.

IMPORTANT: To improve the quality of the dryer, technical specifications are subject to change without prior notice.

IMPORTANT: The values declared have been obtained in a laboratory environment according to the relevant standards. These values may change depending on the environmental conditions and use of the dryer.

ATTENTION:

1. Due to safety reasons, legislation forces a room of at least 1 m³ per 8 g refrigerant for such equipment. For 150 g propane, the minimum allowed room size would be 18.75 m³.
2. Coolant :Risk of fire/risk of poisoning/risk of material damage and damage to the appliance. The appliance contains refrigerant which, although it is environmentally friendly, is flammable R290. Failure to dispose of it properly may result in a fire or poisoning. Dispose of the appliance properly and do not damage the pipes in the refrigerant circuit.

- Type of refrigerant: R290
- Quantity of gas: 150 g
- ODP (Ozone Depletion Potential): 0
- GWP (Global Warming Potential): 3

1. Risk of explosion or fire. Remove any cigarette lighters and matches from pockets.
2. Do not place the dryer near open fires and ignition sources.

7. TROUBLESHOOTING

Your dryer is fitted with systems that continuously perform checks during the drying process to take the necessary measures and warn you in case of any malfunction.

WARNING: If the problem persists even if you have applied the steps in this section, please contact the your dealer or an Authorised Service Provider. Never try to repair a nonfunctional product.

PROBLEM	REASON	SOLUTION
The drying process takes a long time.	The surface of the lint filter might be clogged.	Wash the filter with lukewarm water.
	The heat exchanger might be clogged.	Clean the heat exchanger
	The ventilation grills in front of the machine might be closed.	Open the doors/windows to prevent the room temperature from rising too much.
	There might be a layer of limescale on the humidity sensor.	Clean the humidity sensor.
	The dryer might be overloaded with laundry.	Do not overload the dryer.
	The laundry might be insufficiently spun.	Select a higher spin speed on your washing machine.
Laundry comes out damp at the end of the drying process.	The laundry that comes out hot at the end of the drying process generally feels more humid.	
	The programme used might not be suitable for the type of laundry.	Check the care labels on the laundry items, select a suitable programme for the type of laundry and additionally, use the time programmes.
	The surface of the lint filter might be clogged.	Wash the filter with lukewarm water.
	The heat exchanger might be clogged.	Clean the heat exchanger
	The dryer might be overloaded with laundry.	Do not overload the dryer.
	The laundry might be insufficiently spun.	Select a higher spin speed on your washing machine.

PROBLEM	REASON	SOLUTION
The dryer cannot be opened or the programme cannot be started. The dryer does not get activated when adjusted.	The dryer might not be plugged in.	Make sure that the plug is fitted in the socket.
	The loading door might be open.	Make sure that the loading door is properly closed.
	You might not have set a programme or pressed the Start/Pause key.	Make sure that the programme has been set and the dryer is not in the Standby (Pause) mode.
	Child lock might be active.	Deactivate the child lock.
The programme has been interrupted for no reason.	The loading door might not be closed properly.	Make sure that the loading door is properly closed.
	There might have been a power failure.	Press the Start/Pause key to start the programme.
	The water tank might be full.	Empty the water tank.
Clothes have shrunk, felted or deteriorated.	The programme used might not be suitable for the type of laundry.	Check the care labels on the laundry items, select a suitable programme for the type of laundry.
Water leaking from the loading door.	There might be lint accumulated on the inner surfaces of the loading door and on the surfaces of the gasket of the loading door.	Clean the inner surfaces of the loading door and the surfaces of the gasket of the loading door.
The loading door opens on its own.	The loading door might not be closed properly.	Push the loading door until you hear the closing sound.
The water tank warning symbol is on/flashing.	The water tank might be full.	Empty the water tank.
	The water discharge hose might be bent.	If the product is connected directly to the water outlet, check the water discharge hose.
The heat exchanger cleaning warning symbol is on.	The heat exchanger might be unclean.	Clean the heat exchanger.
The filter cleaning warning symbol is on.	The lint filter might be unclean.	Clean the filter.
	The filter seat might be clogged by lint.	Clean the filter seat.
	There might be a layer that causes obstruction on the surface of the lint filter.	Wash the filter with lukewarm water.

PROBLEM	REASON	SOLUTION
The program can not be started and the filter warning led is blinking	The filter seat might be clogged by lint.	Clean the filter.
	There might be a layer that causes obstruction on the surface of the lint filter.	Clean the filter seat.
	The condenser may not be placed.	Wash the filter with lukewarm water.
The program can not be started and both condenser and filter warning leds are blinking.	The condenser and filter may not be placed.	Replace the filter and condenser.
	The filter and condenser warning leds are blinking even though the filter and condenser are placed.	Call technical service.

8. AUTOMATIC FAULT WARNINGS AND WHAT TO DO

Your tumble dryer is equipped with a built-in fault detection system, indicated by a combination of flashing operation lights. The most common failure codes are shown below.

ERROR CODE	SOLUTION
E00	Contact the nearest authorised service agent.
E03 /	Empty the water tank, if problem does not solved, contact the nearest authorised service agent.
E04	Contact the nearest authorised service agent.
E05	Contact the nearest authorised service agent.
E06	Contact the nearest authorised service agent.
E07	Contact the nearest authorised service agent.
E08	There may be voltage fluctuation in mains.Wait until voltage is appropriate for working range.

9. ENVIRONMENTAL PROTECTION AND PACKAGING INFORMATION

9.1 Packaging Information

The packaging of this product is made of recyclable materials. Do not dispose of the packaging, waste together with household or other waste. Instead, take it to a packaging collection point defined by your local authority.

10. DESCRIBING THE ENERGY LABEL AND SAVING ENERGY

10.1 Energy Labelling

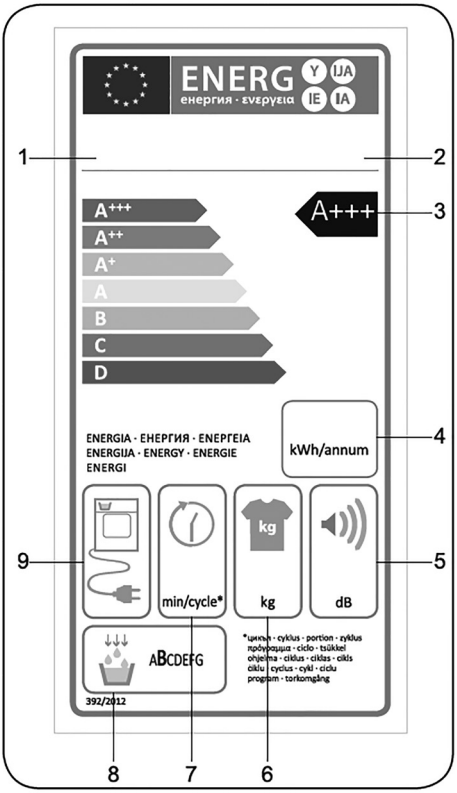

1. Trademark
2. Model
3. Energy Class
4. Annual Power Consumption
5. Noise During Drying
6. Dry Laundry Capacity
7. Cotton Cupboard Dry Cycle Time
8. Condensing Efficiency Class
9. Machine Technology

10.2 Energy Efficiency

- You should operate the dryer to full capacity, but make sure that it is not overloaded.
- When the laundry is being washed, the spin speed should be at the highest level possible. This will shorten the drying time and reduce energy consumption.
- Make sure that the same kinds of laundry are dried together.
- Please follow the recommendations in the user manual for programme selection.
- For air circulation, leave an appropriate clearance on the front and back sides of the dryer. Do not cover the grills on the front side of the machine.
- Unless necessary, do not open the door of the machine when drying. If you have to open it, do not keep it open for a long time.
- Do not add new (wet) laundry during the drying process.
- Hairs and lint that detach from the laundry and merge in the air are collected by the „Lint Filters“. Please make sure that the filters are cleaned before and after each use.
- For models with a heat pump, make sure that the heat exchanger is cleaned at least three times a month or after each 10 uses.
- During the drying process, the environment where the dryer is installed must be well ventilated.

PRODUCT FICHE	
Complying Commission Delegated Regulation (EU) No 392/2012	
Supplier name or trademark	ETA
Model name	ETA355690000
Rated capacity (kg)	8
Type of Tumble Dryer	Heat pump
Energy efficiency class (1)	A+++
Annual Energy Consumption (kWh) (2)	176
Automatic of Non-automatic	Automatic
Energy Consumption of the standart cotton programme at full load (kWh)	1,39
Energy Consumption of the standart cotton programme at partial load (kWh)	0,81
Power consumption of the off-mode for the standart cotton programme at full load P_O (W)	0,5
Power consumption of the left-on mode for the standart cotton programme at full load P_L (W)	1
The duration of the left mode on (min)	n/a
Standart cotton programme (3)	-
Programme time of the standart cotton programme at full load , T_{dry} (min)	179
Programme time of the standart cotton programme at partial load , $T_{dry1/2}$ (min)	110
Weighted programme time of the standart cotton programme at full and partial load (T_t)	140
Condensation efficiency class (4)	B
Average condensation efficiency of the standart cotton programme at full load C_{drying}	81%
Average condensation efficiency of the standart cotton programme at partial load $C_{drying1/2}$	81%
Weighted condensation efficiency of the standart cotton programme at full load and partial load C_t	81%
Sound power level for the standart cotton programme at full load (5)	65
Built-in	No

(1) Scale from A+++ (most efficient) to D (least efficient)

(2) Energyconsumption based on 160 drying cycles of the standard cotton programme at full and partial load,and the consumption of the low-power modes. Actual energy consumption per cycle will depend on how the appliance is used.

(3) Cotton cupboard dry programme” used at full and partial load is the standard drying programme to which the information in the label and the fiche relates, that this programme is suitable for drying normal wet cotton laundry and that it is the most efficient programme in terms of energyconsumption for cotton.

(4) Scale from G (least efficient) to A (most efficient)

(5) Weighted average value - L wA expressed in dB(A) re 1 pW

We reserve the right to change technical specifications. For any further information, please write to: info@eta.cz

Notes:

Notes:

www.eta.cz | Adresa: ETA a.s., náměstí Práce 2523, 760 01 Zlín